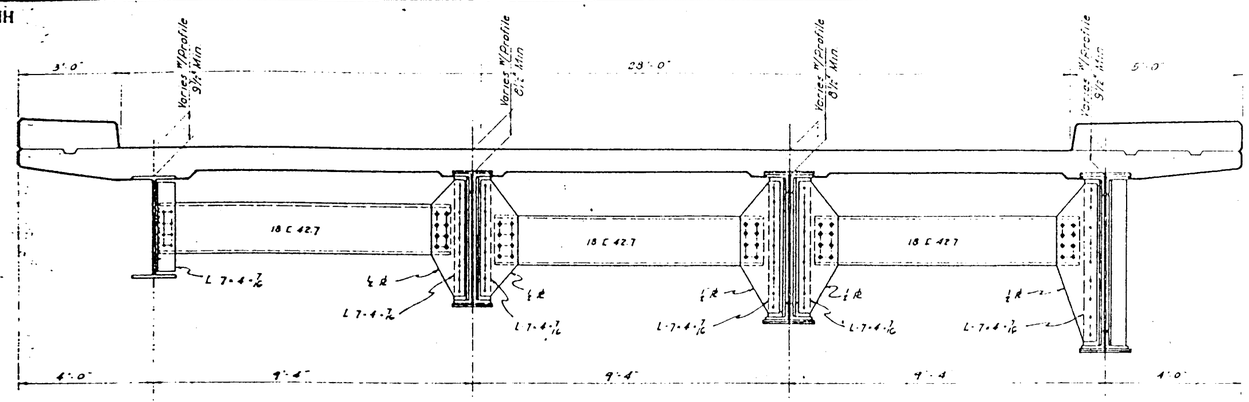


TRANSVERSE SECTION — SPAN 22W

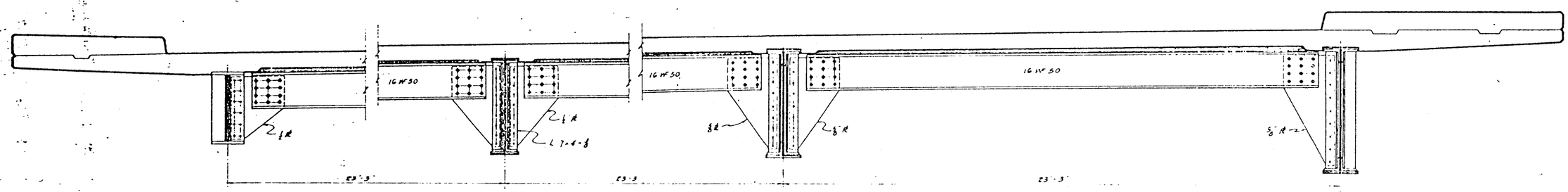


SECTION AT PIER — SPAN 22W
(PARALLEL TO PIER 22W)

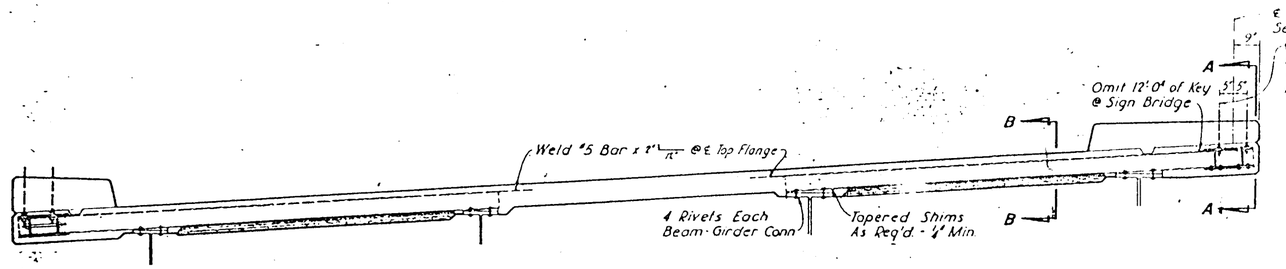


TRANSVERSE SECTION — SPAN 12W
(AT SIGN BRIDGE)

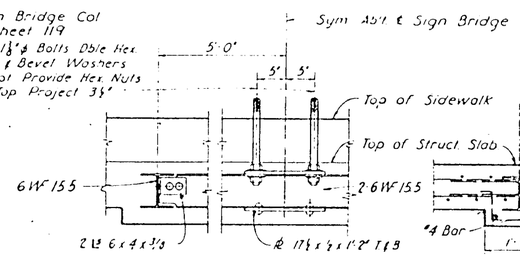


SECTION "A-A"
1"=1'-0"

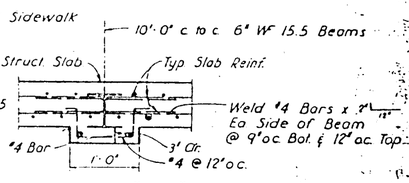


SECTION "B-B"
1"=1'-0"

CITY OF LONG BEACH, CALIFORNIA
HARBOR DEPARTMENT
OFFICE OF THE PORT MANAGER
1333 EL EMBARCADERO

NINTH STREET BRIDGE
OVER THE LOS ANGELES RIVER
APPROACHES CROSS SECTIONS
SPANS 12 & 22W

DATE: JAN. 5, 1954

MOFFATT & NICHOL, INC.
CONSULTING ENGINEERS
LONG BEACH, CALIFORNIA

| MARK | DATE | BY | |
|---|---|---|---|
| | 23-55 | MIN | General Revisions |


CERTIFICATE OF AUTHENTICITY

This is to certify this microphotograph is a true, accurate and complete reproduction of a record in the custody of the Bureau of Engineering. Said documents were delivered in the regular course of business.


BR#2756
2757
2759

PB619775