REVIEWED C.F. Fleming Jr. 12/15/71
DESIGN SECTION DATE

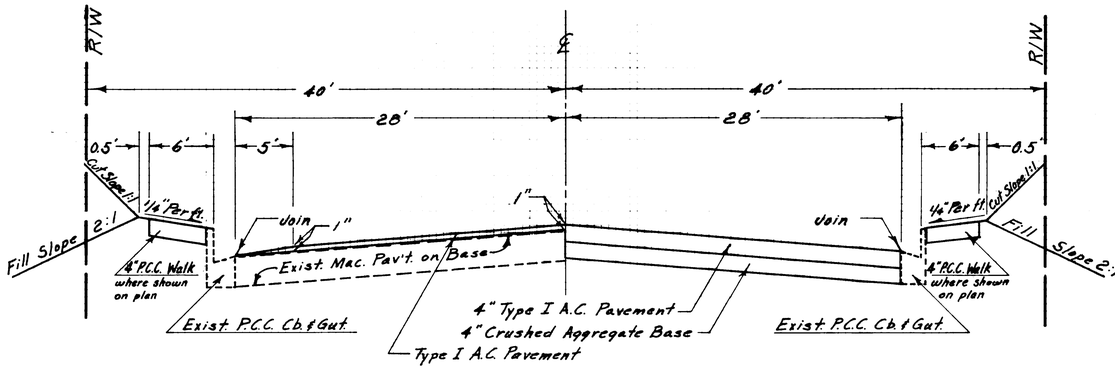

TYPICAL A. C. SECTION
STA. 2+24.6 to STA. 8+16

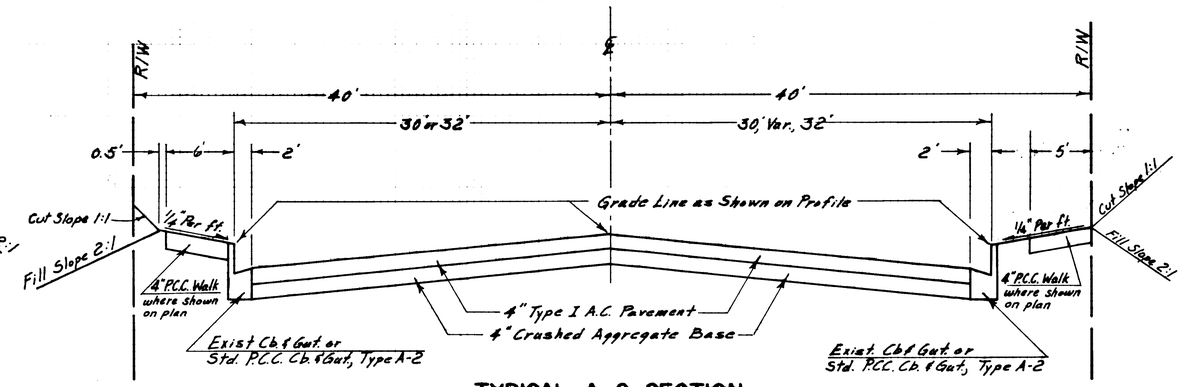

TYPICAL A. C. SECTION
STA. 15+50 to STA. 26+90,
STA. 29+25 to STA. 31+38

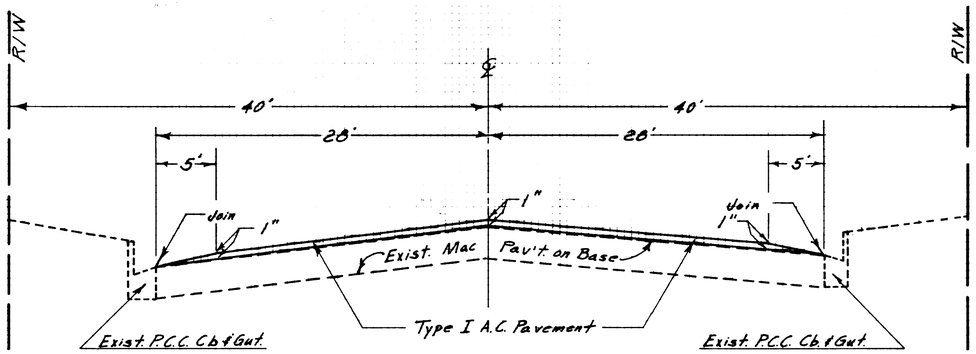

TYPICAL A. C. SECTION
STA. 8+17.5 to STA. 10+93.62
STA. 14+92.09 to STA. 15+50

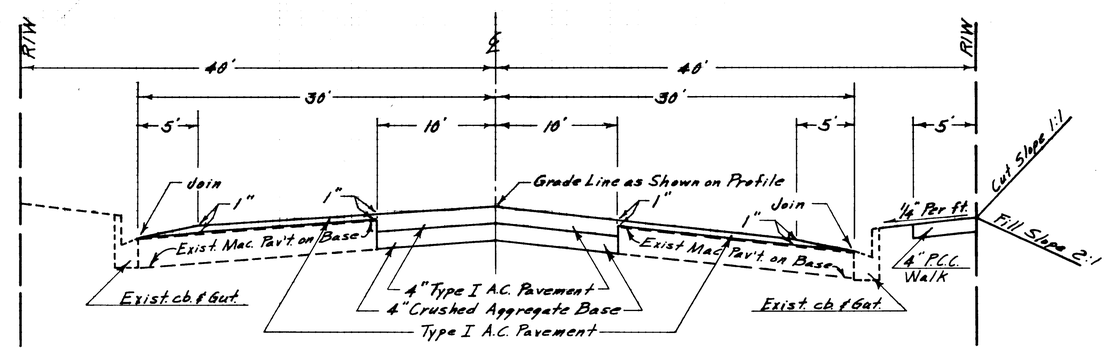

TYPICAL A. C. SECTION
STA. 31+38 to STA. 36+27

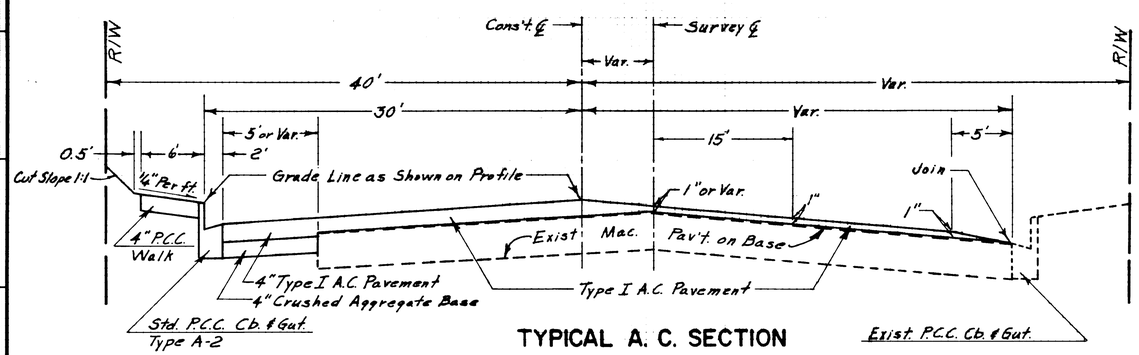

TYPICAL A. C. SECTION
STA. 10+93.62 (Cons't. ℄) to STA. 14+89.10 (Cons't. ℄)

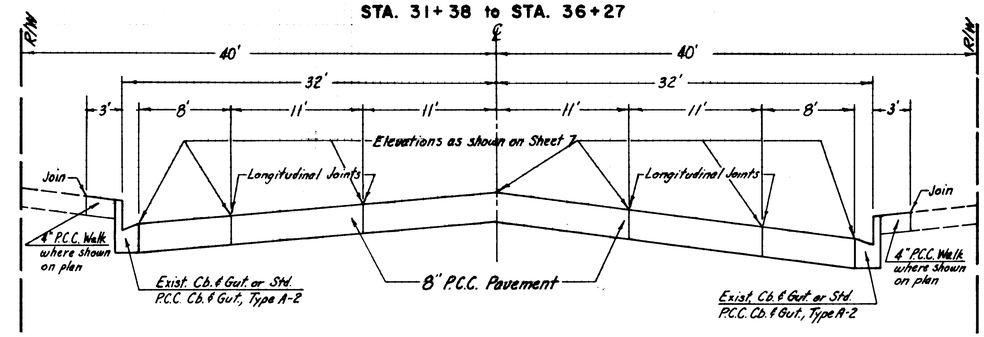

TYPICAL P.C.C. SECTION

PROJECT ENGINEER C.E. No. Mehmet Adamson 16611
DESIGNER D. Waite
CHECKER F. Impelliszeri
REFERENCES RDFB 1432, 1433 RDFB 1432, 1433

			LOS ANGELES COUNTY ROAD DEPARTMENT
			HIGHWAY DIVISION — PROJECT NAME CYPRESS STREET
			LIMITS GRAND AVE. TO S.P.T.C.
DATE	BY	REVISIONS	SCALE HORIZ. VERT. NONE — PROJECT NO. 2911 — SHEET 2 OF 8 SHTS. — DWG. NO. #42582